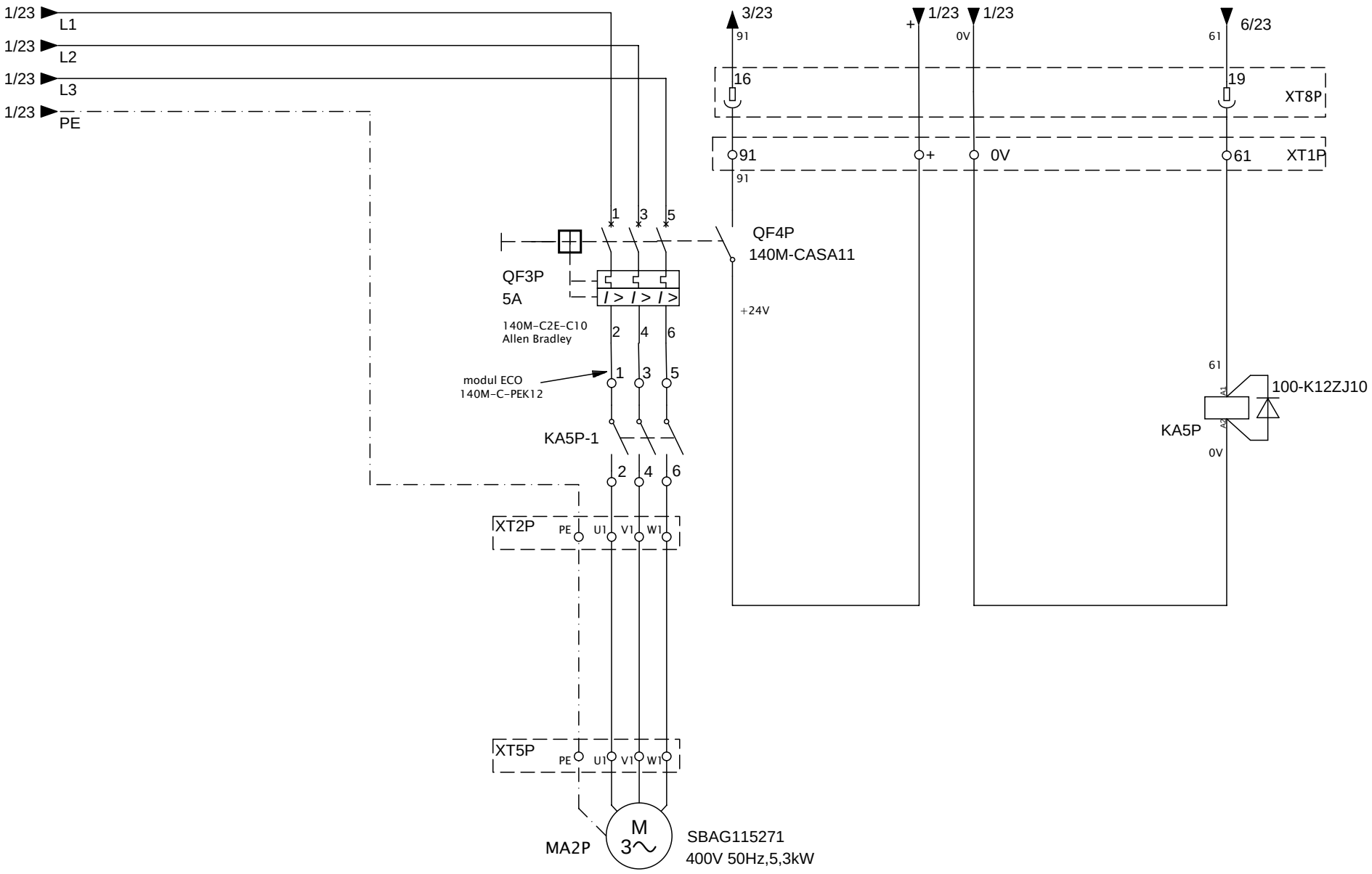

RATEC-CS	version 03 **Group/type**	Hydraulic control unit **Name**	A4 **Sheet size**	E 303 - 03 - 04 **Drawing No.**
	ing. Josef Loos **Author**		**System**	24 **Sheets**
	23.6.2010 **Date**	Platform VIPE - TOS **Project**	0 **Revision** / **Scale**	4 **Sheet**